Appendix F
Drawings

Appendix F. Drawings

Table of Contents

Page No.

Drawing F-1. Combustion Air Blowers F-1

Drawing F-2. MPF Process Flow Schematic F-2

Drawing F-3. MPF Process Flow Diagram F-3

Drawing F-4. MPF Air Sampling Ports W/PCC & SCC F-4

Drawing F-5. MPF Natural Gas P&ID F-5

Drawing F-6. MPF Natural Gas P&ID Burner Control Configuration F-6

Drawing F-7. MPF Air Pollution Control P&ID Sheet 1 ..... F-7

Drawing F-8. MPF Air Pollution Control P&ID Sheet 2 ..... F-8

Drawing F-9. MPF Air Pollution Control P&ID Sheet 3 ..... F-9

Drawing F-10. MPF Air Pollution Control P&ID Sheet 4 ..... F-10

Drawing F-11. MPF/LIC Draft Control P&ID F-11

Drawing F-12. Combustion Air F-12

Drawing F-13. Quench Venturi Arrangement F-13

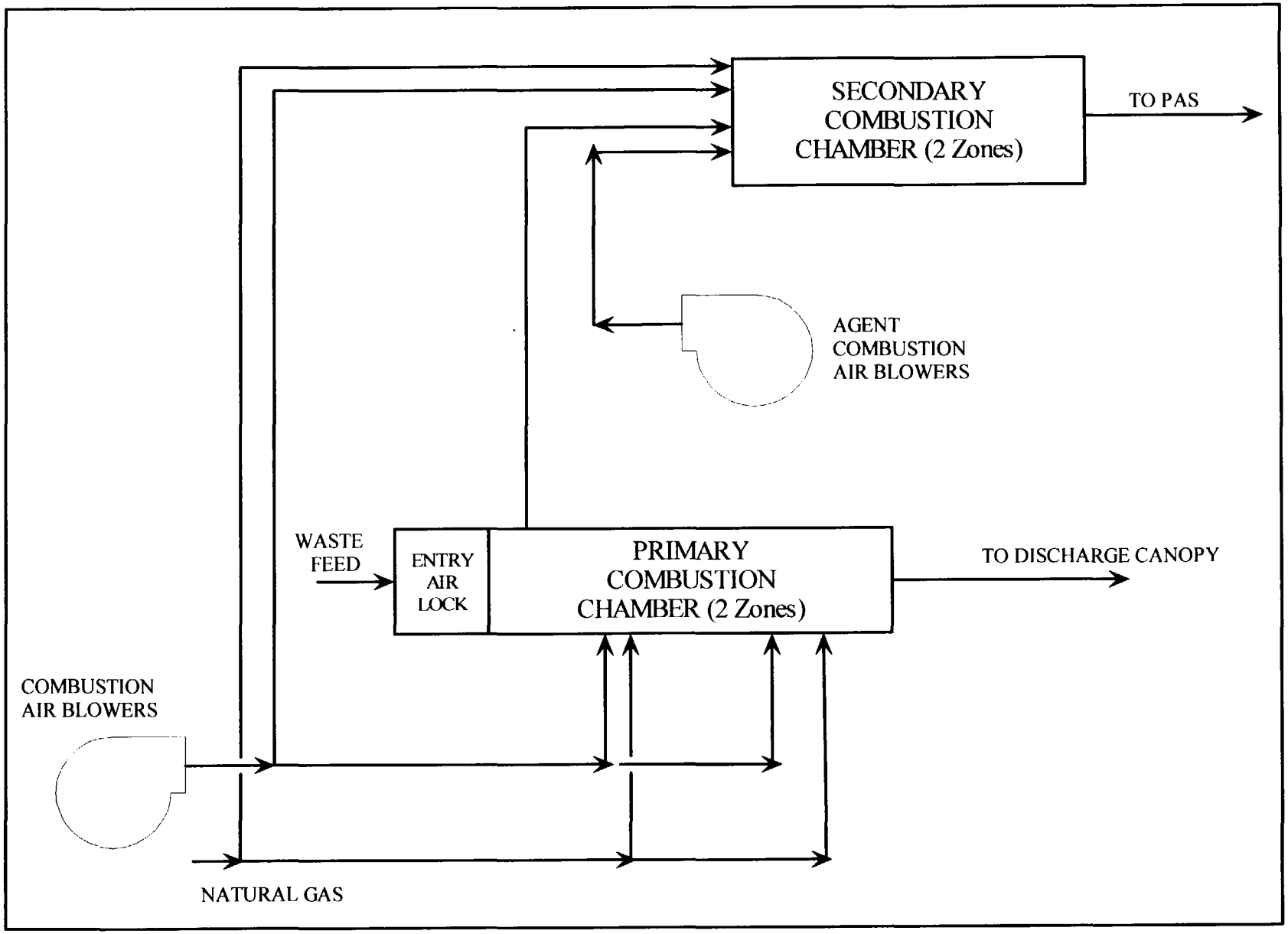

Drawing F-1. Combustion Air Blowers

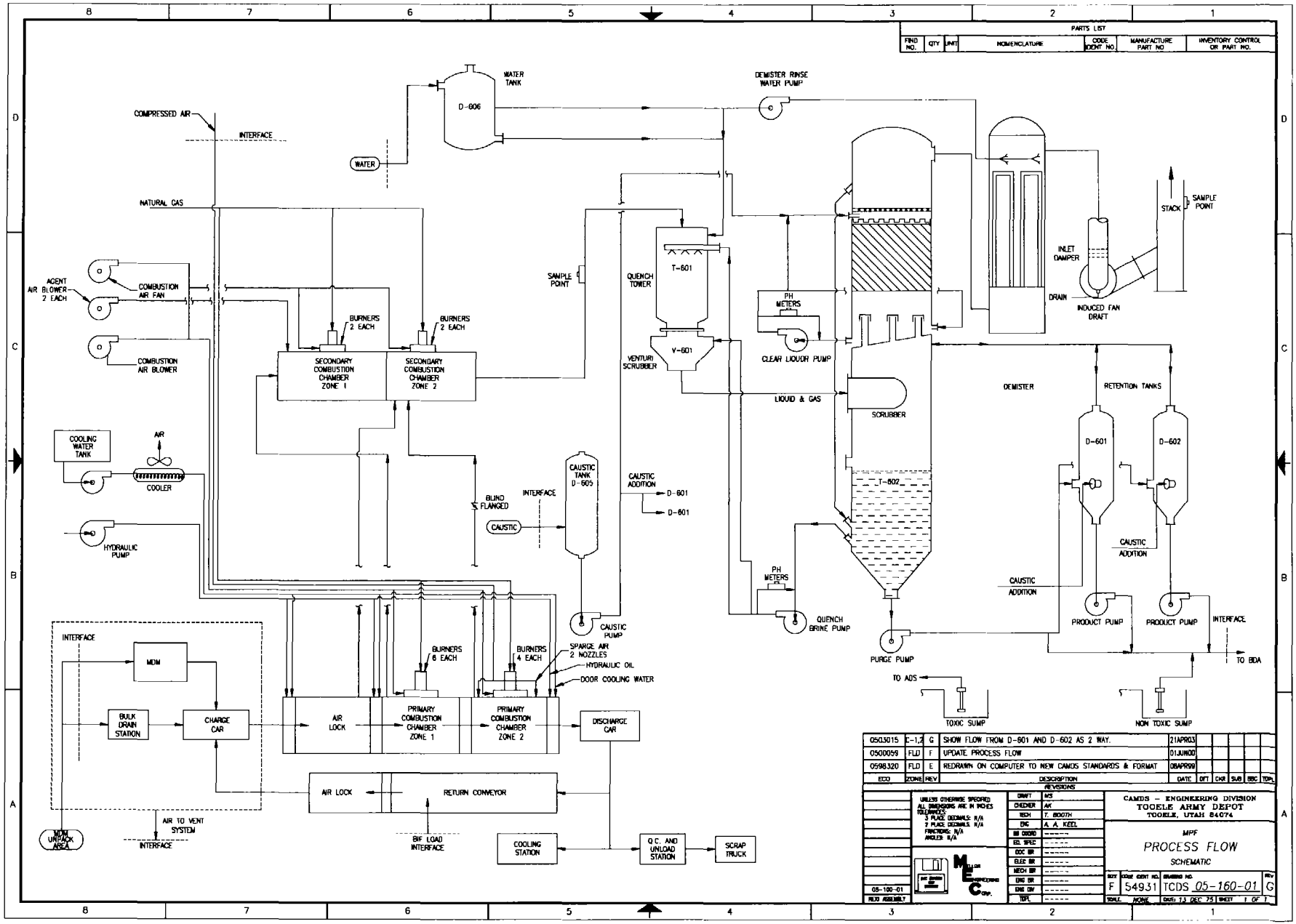
PARTS LIST
FIND NO. | QTY | UNIT | NOMENCLATURE | CODE IDENT NO. | MANUFACTURE PART NO | INVENTORY CONTROL OR PART NO.
WATER TANK
D-606
WATER
COMPRESSED AIR
INTERFACE
NATURAL GAS
DEMISTER RINSE WATER PUMP
AGENT AIR BLOWER 2 EACH
COMBUSTION AIR FAN
COMBUSTION AIR BLOWER
BURNERS 2 EACH
SECONDARY COMBUSTION CHAMBER ZONE 1
SECONDARY COMBUSTION CHAMBER ZONE 2
SAMPLE POINT
QUENCH TOWER
T-601
VENTURI SCRUBBER
V-601
PH METERS
CLEAR LIQUOR PUMP
LIQUID & GAS
SCRUBBER
T-602
DEMISTER
INLET DAMPER
DRAIN
INDUCED FAN DRAFT
STACK
SAMPLE POINT
RETENTION TANKS
D-601
D-602
CAUSTIC ADDITION
PRODUCT PUMP
PRODUCT PUMP
INTERFACE
TO BDA
COOLING WATER TANK
AIR
COOLER
HYDRAULIC PUMP
BLIND FLANGED
INTERFACE
CAUSTIC
CAUSTIC TANK D-605
CAUSTIC ADDITION
D-601
D-601
CAUSTIC PUMP
PH METERS
QUENCH BRINE PUMP
PURGE PUMP
TO ADS
TOXIC SUMP
NON TOXIC SUMP
INTERFACE
MDM
BULK DRAIN STATION
CHARGE CAR
BURNERS 6 EACH
BURNERS 4 EACH
SPARGE AIR 2 NOZZLES
HYDRAULIC OIL
DOOR COOLING WATER
AIR LOCK
PRIMARY COMBUSTION CHAMBER ZONE 1
PRIMARY COMBUSTION CHAMBER ZONE 2
DISCHARGE CAR
AIR LOCK
RETURN CONVEYOR
MDM UNPACK AREA
AIR TO VENT SYSTEM
INTERFACE
BIF LOAD INTERFACE
COOLING STATION
Q.C. AND UNLOAD STATION
SCRAP TRUCK
0503015 | C-1,2 | G | SHOW FLOW FROM D-601 AND D-602 AS 2 WAY. | 21APR03
0500059 | FLD | F | UPDATE PROCESS FLOW | 01JUN00
0598320 | FLD | E | REDRAWN ON COMPUTER TO NEW CAMDS STANDARDS & FORMAT | 08APR99
ECO | ZONE | REV | DESCRIPTION | DATE | DFT | CKR | SUB | BBC | TOPL
REVISIONS
UNLESS OTHERWISE SPECIFIED ALL DIMENSIONS ARE IN INCHES
TOLERANCES
3 PLACE DECIMALS: N/A
2 PLACE DECIMALS: N/A
FRACTIONS: N/A
ANGLES: N/A
DRAFT MS
CHECKER AK
TECH T. BOOTH
ENG A. A. KEEL
CAMDS - ENGINEERING DIVISION
TOOELE ARMY DEPOT
TOOELE, UTAH 84074
MPF
PROCESS FLOW
SCHEMATIC
F 54931 TCDS 05-160-01 G
SCALE NONE
DATE 13 DEC 75
SHEET 1 OF 1

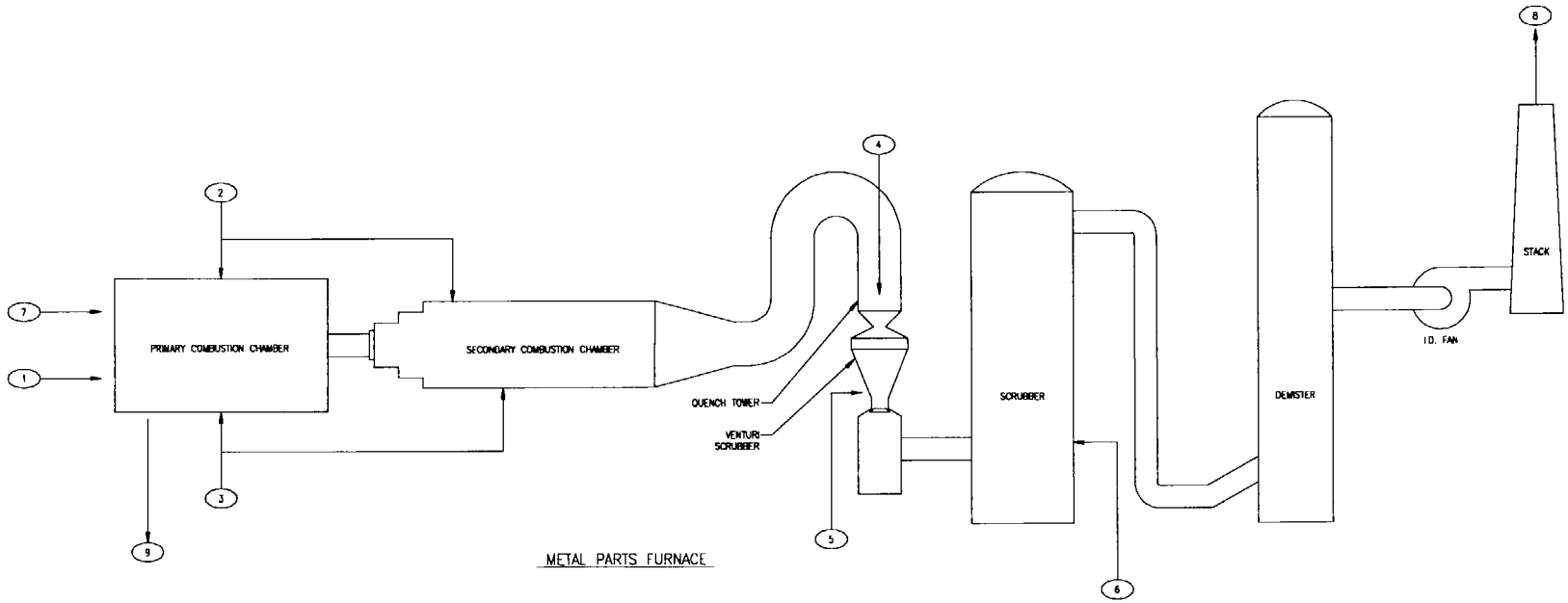

METAL PARTS FURNACE

TABLE FOR PROCESSS FLOW DIAGRAM

STREAM NO.	NOMENCLATURE	COMPOSITION	FLOW RATE	COMMENTS
1	WASTE FEED	SURROGATE FEED & METALS SPIKING SOLUTIONS	273.4[1] [lb/hr]	SEE MATERIAL BALANCE, APPENDIX C, AND TABLE C-7A
2	COMBUSTION AIR	0.21 O_2, 0.79 N_2, H_2O	2850 ACFM	48% TO PCC, 52% TO SDC, BASED ON BURNER CAPACITIES (BOTH BLOWERS)
3	NATURAL GAS	CH_4	216.9 [lb/hr]	SEE NOTE 2
4a	QUENCH WATER	H_2O	NOT MEASURED	PLANT WATER, AS REQUIRED TO MAINTAIN GAS TEMPERATURE
4b	QUENCH BRINE	H_2O, NaOH	$\geq$ 48, gpm	PERMIT LIMIT
5	VENTURI BRINE	H_2O, NaOH	61 gpm	SEE NOTE 2
6	CLEAR LIQUOR	H_2O, NaOH	249 gpm	SEE NOTE 2
7	DRAFT AIR	0.21 O_2, 0.79 N_2, H_2O	NOT MEASURED	DRAFT IN-LEAKAGE INTO PCC
8	STACK GAS	N_2, O_2, CO, CO_2, H_2O	4.78×10^3 SCFM.	SEE NOTE 2
9	ASH, NON COMBUSTIBLES	ASH, SCRAP METAL, NON-COMBUSTIBLE MATERIAL	0.86 [lb/hr]	SEE TABLE C-8a, MATERIAL BALANCE

NOTES

1. COMBUSTIBLES ONLY
2. PF VALUES BASED ON TRIAL #3, BASELINE, JULY 10, 1995

ECO	ZONE	REV	DESCRIPTION	DATE	DFT	CKR	SUB	ENG	TOPL

REVISIONS

DRAFT	D. ANDERSON
CHECKER	G. LAWRENCE
ECN	------
ENG	M. BURDETTE
ME BOARD	M. BURDETTE
EL SPEC	------
DOC BR	J. STILINOVICH
ELEC BR	R. NYBO
MECH BR	J. SIMPSON
ENG BR	------
ENG BW	D.W. GRIEDER
TOPL	S. WHEELER

VALUES OTHERWISE SPECIFIED ALL DIMENSIONS ARE IN INCHES TOLERANCES: 3 PLACE DECIMALS N/A 2 PLACE DECIMALS N/A FRACTIONS N/A ANGLES: N/A

NEXT ASSEMBLY

MILLER ENGINEERING CORP.

CAMDS - ENGINEERING DIVISION
TOOELE ARMY DEPOT
TOOELE, UTAH 84074

M P F
PROCESS FLOW
DIAGRAM

SIZE F | CODE IDENT NO. 54931 | DRAWING NO. TCDS 05-100-02 | REV

SCALE NONE | DATE 14 JAN 03 | SHEET | OF

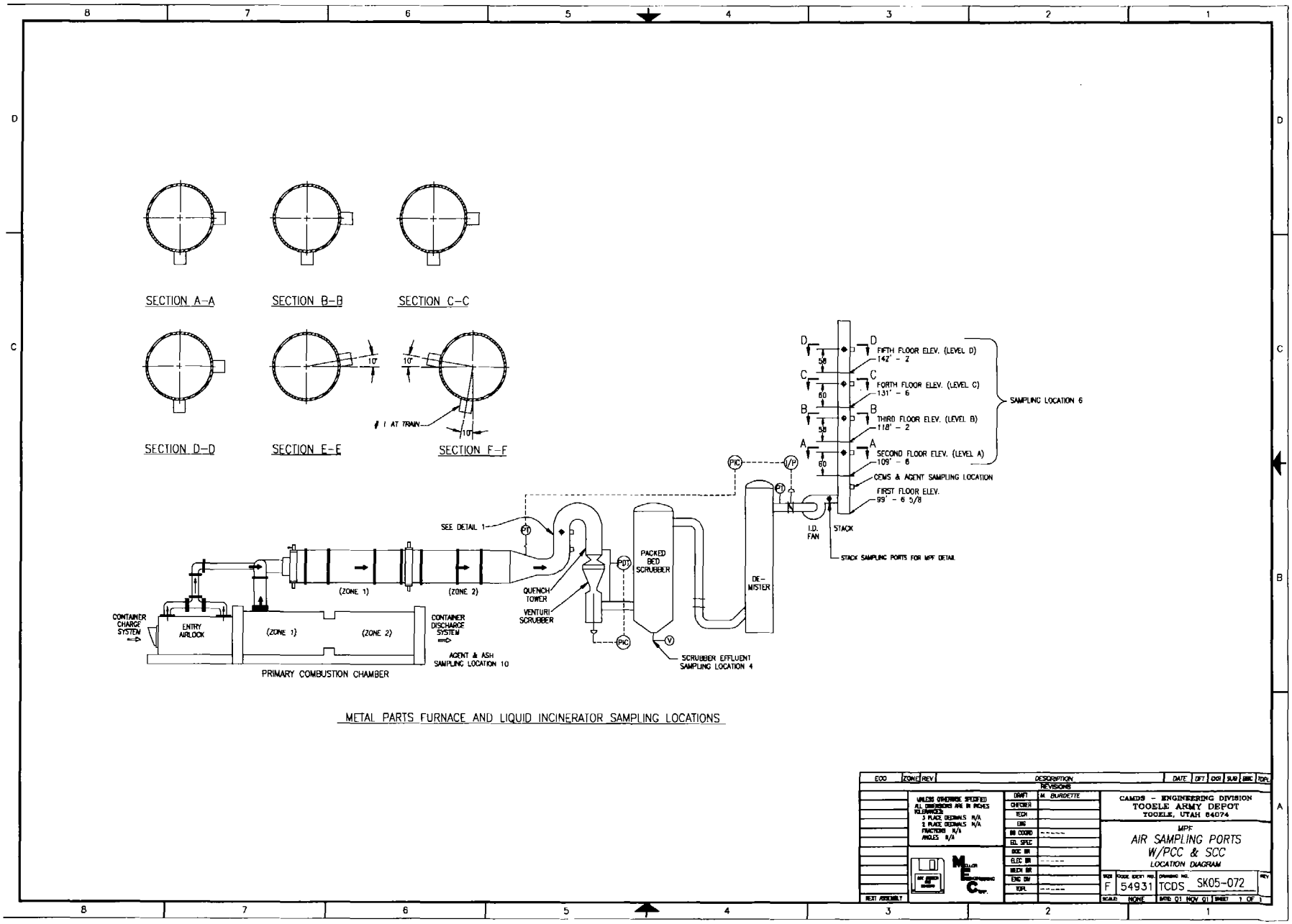
SECTION A-A
SECTION B-B
SECTION C-C
SECTION D-D
SECTION E-E
SECTION F-F
10°
1 AT TRAIN
FIFTH FLOOR ELEV. (LEVEL D)
142' - 2
FORTH FLOOR ELEV. (LEVEL C)
131' - 6
THIRD FLOOR ELEV. (LEVEL B)
118' - 2
SECOND FLOOR ELEV. (LEVEL A)
109' - 6
CEMS & AGENT SAMPLING LOCATION
FIRST FLOOR ELEV.
99' - 6 5/8
SAMPLING LOCATION 6
I.D. FAN
STACK
STACK SAMPLING PORTS FOR MPF DETAIL
SEE DETAIL 1
PACKED BED SCRUBBER
DE-MISTER
QUENCH TOWER
VENTURI SCRUBBER
SCRUBBER EFFLUENT SAMPLING LOCATION 4
(ZONE 1)
(ZONE 2)
CONTAINER CHARGE SYSTEM
ENTRY AIRLOCK
CONTAINER DISCHARGE SYSTEM
AGENT & ASH SAMPLING LOCATION 10
PRIMARY COMBUSTION CHAMBER
METAL PARTS FURNACE AND LIQUID INCINERATOR SAMPLING LOCATIONS
CAMDS - ENGINEERING DIVISION
TOOELE ARMY DEPOT
TOOELE, UTAH 84074
MPF
AIR SAMPLING PORTS
W/PCC & SCC
LOCATION DIAGRAM
F 54931 TCDS SK05-072
SCALE NONE
DATE 01 NOV 01
SHEET 1 OF 1

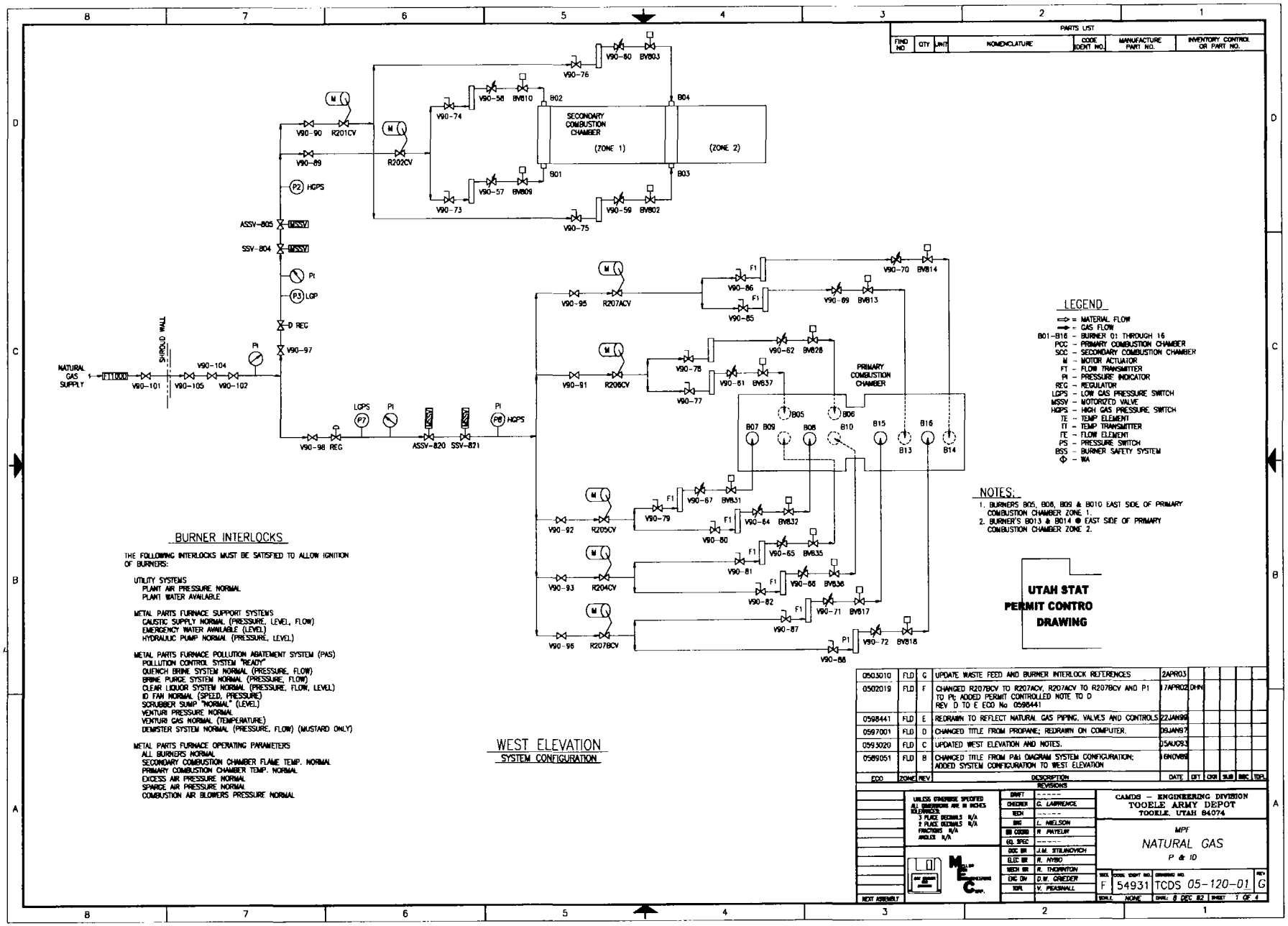
PARTS LIST
FIND NO
QTY
UNIT
NOMENCLATURE
CODE IDENT NO.
MANUFACTURE PART NO.
INVENTORY CONTROL OR PART NO.
SECONDARY COMBUSTION CHAMBER
(ZONE 1)
(ZONE 2)
PRIMARY COMBUSTION CHAMBER
NATURAL GAS SUPPLY
SHROUD WALL
LEGEND
= MATERIAL FLOW
= GAS FLOW
B01-B16 - BURNER 01 THROUGH 16
PCC - PRIMARY COMBUSTION CHAMBER
SCC - SECONDARY COMBUSTION CHAMBER
M - MOTOR ACTUATOR
FT - FLOW TRANSMITTER
PI - PRESSURE INDICATOR
REG - REGULATOR
LGPS - LOW GAS PRESSURE SWITCH
MSSV - MOTORIZED VALVE
HGPS - HIGH GAS PRESSURE SWITCH
TE - TEMP ELEMENT
TT - TEMP TRANSMITTER
FE - FLOW ELEMENT
PS - PRESSURE SWITCH
BSS - BURNER SAFETY SYSTEM
Φ - WA
NOTES:
1. BURNERS B05, B06, B09 & B010 EAST SIDE OF PRIMARY COMBUSTION CHAMBER ZONE 1.
2. BURNER'S B013 & B014 @ EAST SIDE OF PRIMARY COMBUSTION CHAMBER ZONE 2.
UTAH STAT PERMIT CONTRO DRAWING
BURNER INTERLOCKS
THE FOLLOWING INTERLOCKS MUST BE SATISFIED TO ALLOW IGNITION OF BURNERS:
UTILITY SYSTEMS
PLANT AIR PRESSURE NORMAL
PLANT WATER AVAILABLE
METAL PARTS FURNACE SUPPORT SYSTEMS
CAUSTIC SUPPLY NORMAL (PRESSURE, LEVEL, FLOW)
EMERGENCY WATER AVAILABLE (LEVEL)
HYDRAULIC PUMP NORMAL (PRESSURE, LEVEL)
METAL PARTS FURNACE POLLUTION ABATEMENT SYSTEM (PAS)
POLLUTION CONTROL SYSTEM "READY"
QUENCH BRINE SYSTEM NORMAL (PRESSURE, FLOW)
BRINE PURGE SYSTEM NORMAL (PRESSURE, FLOW)
CLEAR LIQUOR SYSTEM NORMAL (PRESSURE, FLOW, LEVEL)
ID FAN NORMAL (SPEED, PRESSURE)
SCRUBBER SUMP "NORMAL" (LEVEL)
VENTURI PRESSURE NORMAL
VENTURI GAS NORMAL (TEMPERATURE)
DEMISTER SYSTEM NORMAL (PRESSURE, FLOW) (MUSTARD ONLY)
METAL PARTS FURNACE OPERATING PARAMETERS
ALL BURNERS NORMAL
SECONDARY COMBUSTION CHAMBER FLAME TEMP. NORMAL
PRIMARY COMBUSTION CHAMBER TEMP. NORMAL
EXCESS AIR PRESSURE NORMAL
SPARGE AIR PRESSURE NORMAL
COMBUSTION AIR BLOWERS PRESSURE NORMAL
WEST ELEVATION
SYSTEM CONFIGURATION
0503010 FLD G UPDATE WASTE FEED AND BURNER INTERLOCK REFERENCES 2APR03
0502019 FLD F CHANGED R207BCV TO R207ACV, R207ACV TO R207BCV AND P1 TO PI; ADDED PERMIT CONTROLLED NOTE TO D REV D TO E ECO No 0598441 17APR02 DHN
0598441 FLD E REDRAWN TO REFLECT NATURAL GAS PIPING, VALVES AND CONTROLS 22JAN99
0597001 FLD D CHANGED TITLE FROM PROPANE; REDRAWN ON COMPUTER. 09JAN97
0593020 FLD C UPDATED WEST ELEVATION AND NOTES. 15AUG93
0589051 FLD B CHANGED TITLE FROM P&I DIAGRAM SYSTEM CONFIGURATION; ADDED SYSTEM CONFIGURATION TO WEST ELEVATION 16NOV89
ECO ZONE REV DESCRIPTION DATE DFT CKR SUB MFC TOPL
REVISIONS
UNLESS OTHERWISE SPECIFIED ALL DIMENSIONS ARE IN INCHES TOLERANCES: 3 PLACE DECIMALS N/A 2 PLACE DECIMALS N/A FRACTIONS N/A ANGLES N/A
DRAFT
CHECKER G. LAWRENCE
TECH
ENG L. NIELSON
BR COORD R. PAYEUR
EQ. SPEC
DOC BR J.M. STILINOVICH
ELEC BR R. NYBO
MECH BR R. THORNTON
ENG DIV D.W. GRIEDER
TOPL V. PEASNALL
NEXT ASSEMBLY
CAMDS - ENGINEERING DIVISION
TOOELE ARMY DEPOT
TOOELE, UTAH 84074
MPF
NATURAL GAS
P & ID
SIZE F CODE IDENT NO. 54931 DRAWING NO. TCDS 05-120-01 REV G
SCALE NONE DATE: 8 DEC 82 SHEET 1 OF 4

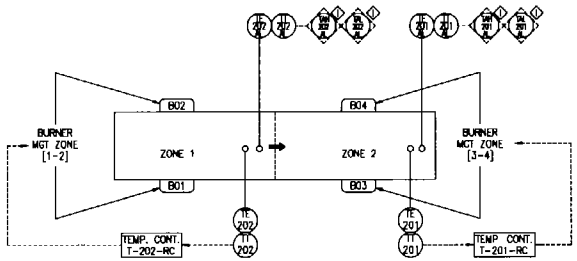

SECONDARY COMBUSTION CHAMBER

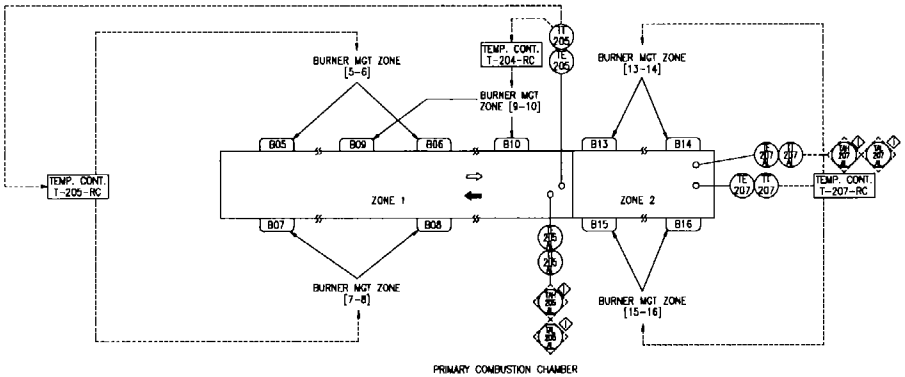

PRIMARY COMBUSTION CHAMBER

UTAH STATE PERMIT CONTROLLED DRAWING

SEE SHEET 1 FOR LEGEND

ECO	ZONE	REV	DESCRIPTION	DATE	DFT	CKR	SUB	BBC	TOPL
0503011	FLD	G	CHANGED TI TO TT AND ADDED TAH & TAL TO 202, 205, 207.	10APR05	NL				
0502056	FLD	F	ADDED TE&TI; 207AL, 205AL & 202AL	8DEC02	NL				
0502025	B7	E	ADDED PERMIT CONTROLLED NOTE TO DRAWING	24APR02	DHN				
0598442	FLD	D	ADDED "SEE SHEET 1 FOR LEGEND"; CHANGED TITLE	22JAN99					
0597002	FLD	C	CHANGED TITLE FROM PROPANE; REDRAWN ON COMPUTER	09JAN97					
0593019	FLD	B	UPDATED BURNERCONTROL NOMENCLATURES	05AUG93					
0589050	B-7	A	DELETE REFERENCE TO B-12, CHANGE TITLE TO MPF, PROPANE AND FUEL OIL P & ID	20DEC88					

REVISIONS

UNLESS OTHERWISE SPECIFIED ALL DIMENSIONS ARE IN INCHES TOLERANCES: 3 PLACE DECIMALS N/A; 2 PLACE DECIMALS N/A; FRACTIONS N/A; ANGLES N/A

DRAFT	-----
CHECKER	G. LAWRENCE
TECH	-----
ENG	L. NIELSON
BB COORD	R. PAYZEUR
EQ. SPEC	-----
DOC BR	J.M. STRUNOVICH
ELEC BR	R. NYBO
MECH BR	R. THORNTON
ENG DIV	D.W. GRIEDER
EQPL	V. PEASNALL

NEXT ASSEMBLY

CAMDS - ENGINEERING DIVISION
TOOELE ARMY DEPOT
TOOELE, UTAH 84074

MPF
NATURAL GAS P & ID
BURNER CONTROL CONFIGURATION

SIZE F | CODE IDENT NO. 54931 | DRAWING NO. TCDS 05-120-01 | REV G
SCALE: NONE | DATE: 3 JULY 89 | SHEET 2

METAL PARTS FURNACE
BURNER CONTROL
CONFIGURATION

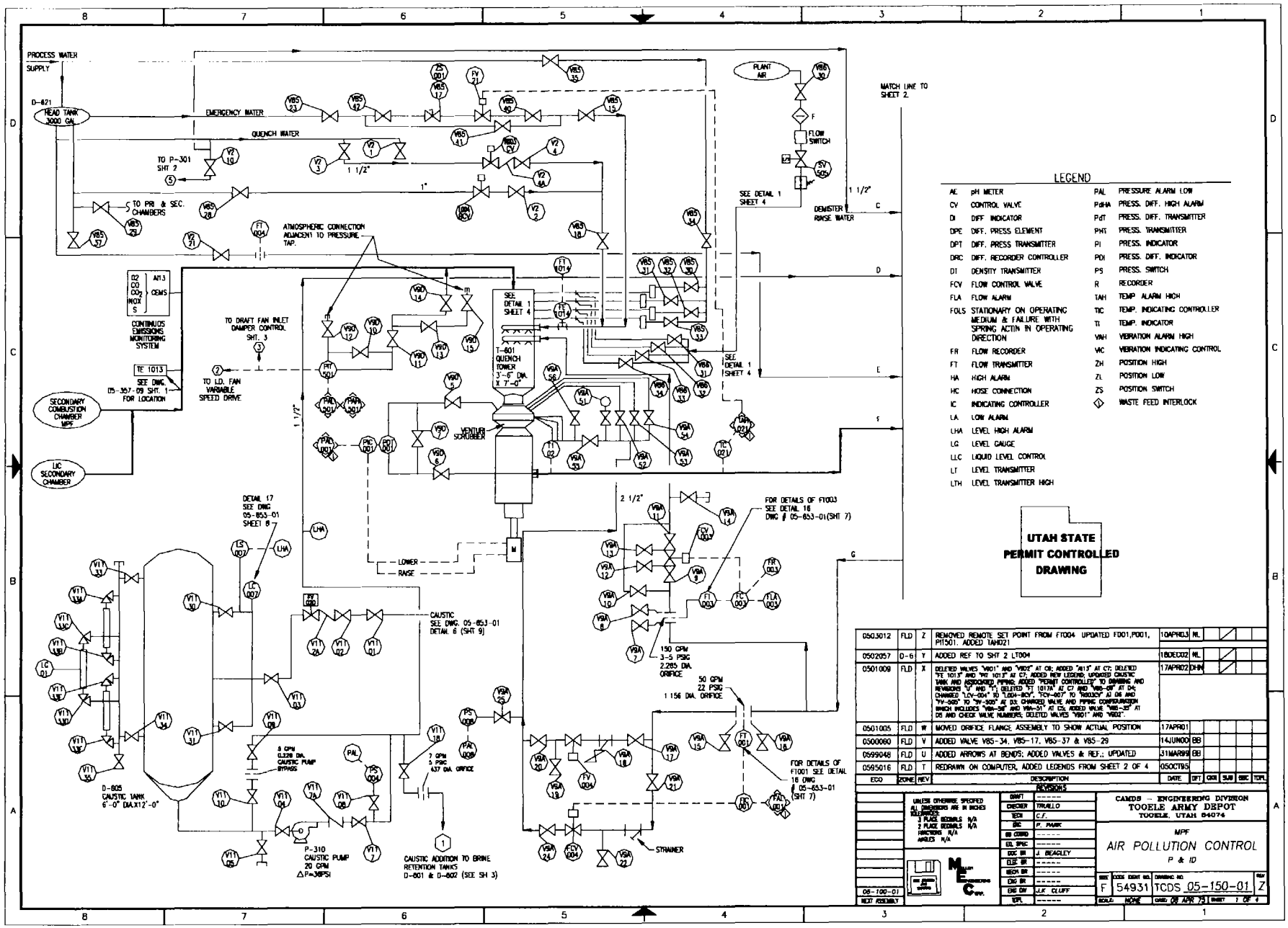

LEGEND

AE	pH METER	PAL	PRESSURE ALARM LOW
CV	CONTROL VALVE	PdHA	PRESS. DIFF. HIGH ALARM
DI	DIFF INDICATOR	PdT	PRESS. DIFF. TRANSMITTER
DPE	DIFF. PRESS ELEMENT	PHT	PRESS. TRANSMITTER
DPT	DIFF. PRESS TRANSMITTER	PI	PRESS. INDICATOR
DRC	DIFF. RECORDER CONTROLLER	PDI	PRESS. DIFF. INDICATOR
DT	DENSITY TRANSMITTER	PS	PRESS. SWITCH
FCV	FLOW CONTROL VALVE	R	RECORDER
FLA	FLOW ALARM	TAH	TEMP. ALARM HIGH
FOLS	STATIONARY ON OPERATING MEDIUM & FAILURE WITH SPRING ACTIN IN OPERATING DIRECTION	TIC	TEMP. INDICATING CONTROLLER
		TI	TEMP. INDICATOR
		VAH	VIBRATION ALARM HIGH
FR	FLOW RECORDER	VIC	VIBRATION INDICATING CONTROL
FT	FLOW TRANSMITTER	ZH	POSITION HIGH
HA	HIGH ALARM	ZL	POSITION LOW
HC	HOSE CONNECTION	ZS	POSITION SWITCH
IC	INDICATING CONTROLLER	◇	WASTE FEED INTERLOCK
LA	LOW ALARM		
LHA	LEVEL HIGH ALARM		
LG	LEVEL GAUGE		
LLC	LIQUID LEVEL CONTROL		
LT	LEVEL TRANSMITTER		
LTH	LEVEL TRANSMITTER HIGH		

ECO	ZONE	REV	DESCRIPTION	DATE	DFT	CKR	SUB	ESC	TDPL
0503012	FLD	Z	REMOVED REMOTE SET POINT FROM FT004 UPDATED FD01,PD01, PIT501. ADDED TAH021	10APR03	ML				
0502057	D-6	Y	ADDED REF TO SHT 2 LT004	18DEC02	ML				
0501009	FLD	X	DELETED VALVES "V801" AND "V802" AT C8; ADDED "413" AT C7; DELETED "FE 1013" AND "PHT 1013" AT C7; ADDED NEW LEGEND; UPGRADED CAUSTIC TANK AND ASSOCIATED PIPING; ADDED "PERMIT CONTROLLED" TO DRAWING AND REVISIONS "U" AND "T"; DELETED "FT 1017A" AT C7 AND "V48-08" AT D4; CHANGED "LCV-004" TO "LD004-BCV", "FCV-007" TO "FD002CV" AT D6 AND "FV-505" TO "SV-505" AT D3; CHANGED VALVE AND PIPING CONFIGURATION WHICH INCLUDES "V84-36" AND "V84-37" AT E5; ADDED VALVE "V48-28" AT D5 AND CHECK VALVE NUMBERS; DELETED VALVES "V801" AND "V802."	17APR02	DHN				
0501005	FLD	W	MOVED ORIFICE FLANGE ASSEMBLY TO SHOW ACTUAL POSITION	17APR01					
0500060	FLD	V	ADDED VALVE V85-34, V85-17, V85-37 & V85-29	14JUN00	BB				
0599048	FLD	U	ADDED ARROWS AT BENDS; ADDED VALVES & REF.; UPDATED	31MAR99	BB				
0595016	FLD	T	REDRAWN ON COMPUTER, ADDED LEGENDS FROM SHEET 2 OF 4	05OCT95					

REVISIONS

UNLESS OTHERWISE SPECIFIED ALL DIMENSIONS ARE IN INCHES
TOLERANCES:
3 PLACE DECIMALS N/A
2 PLACE DECIMALS N/A
FRACTIONS N/A
ANGLES N/A

DRAFT	------
CHECKER	TRUJILLO
TECH	C.F.
ENG	F. PARK
ED COORD	------
EQL SPEC	------
DOC BR	J. BEAGLEY
ELEC BR	------
MECH BR	------
CHG BR	------
ENG DIV	J.K. CLIFF
TDPL	------

CAMDS - ENGINEERING DIVISION
TOOELE ARMY DEPOT
TOOELE, UTAH 84074

MPF
AIR POLLUTION CONTROL
P & ID

SIZE F | CODE IDENT NO. 54931 | DRAWING NO. TCDS 05-150-01 | REV Z
SCALE: NONE | DATE: 08 APR 75 | SHEET 1 OF 4

05-100-01
NEXT ASSEMBLY

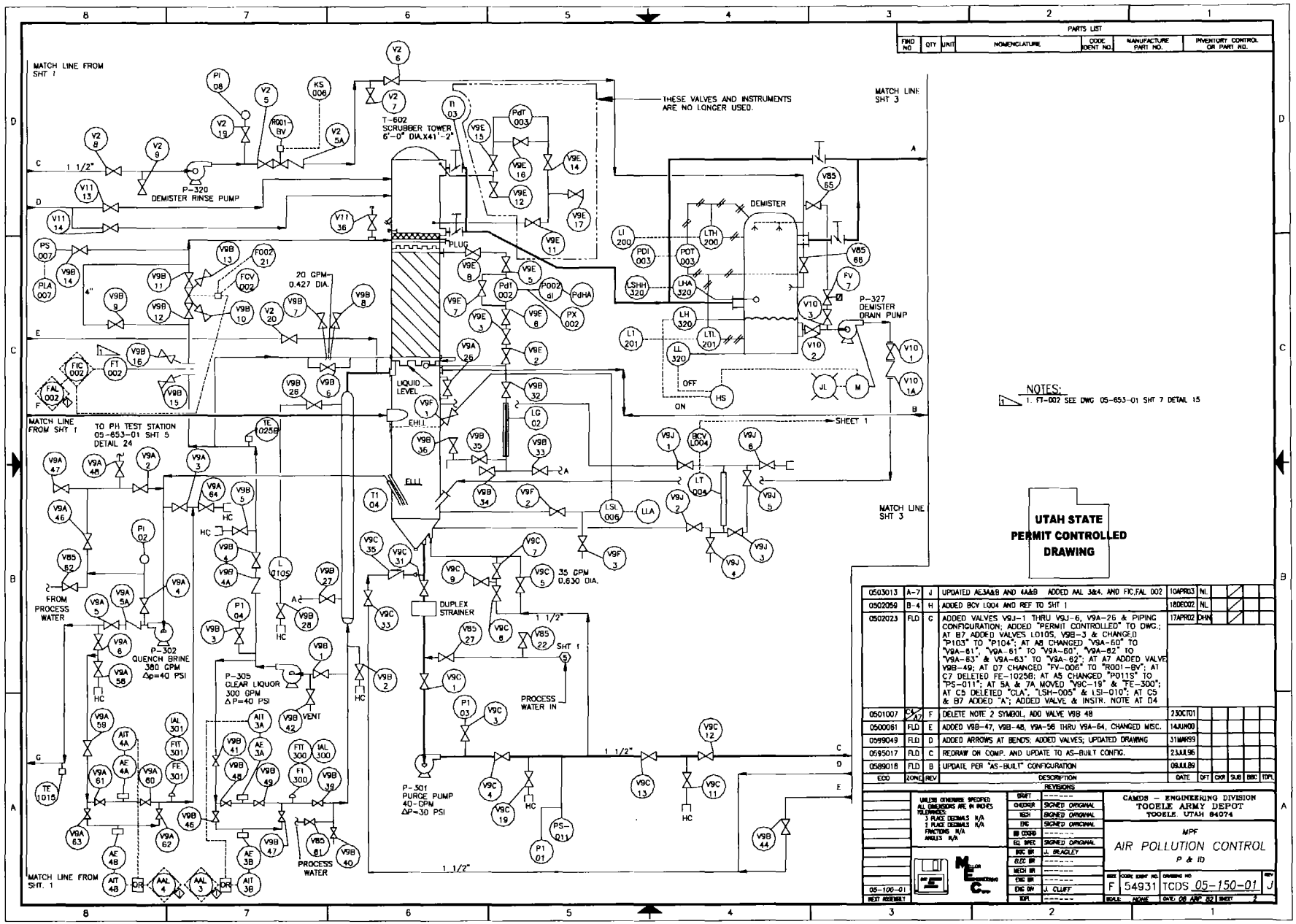
MATCH LINE FROM SHT 1
T-602 SCRUBBER TOWER 6'-0" DIA.X41'-2"
THESE VALVES AND INSTRUMENTS ARE NO LONGER USED.
MATCH LINE SHT 3
P-320 DEMISTER RINSE PUMP
DEMISTER
PLUG
20 GPM 0.427 DIA.
P-327 DEMISTER DRAIN PUMP
LIQUID LEVEL
SHEET 1
TO PH TEST STATION 05-653-01 SHT 5 DETAIL 24
FROM PROCESS WATER
P-302 QUENCH BRINE 380 GPM Δp=40 PSI
P-305 CLEAR LIQUOR 300 GPM ΔP=40 PSI
DUPLEX STRAINER
35 GPM 0.630 DIA.
PROCESS WATER IN
P-301 PURGE PUMP 40-GPM ΔP=30 PSI
PROCESS WATER
MATCH LINE FROM SHT. 1
NOTES:
1. FT-002 SEE DWG 05-653-01 SHT 7 DETAIL 15
UTAH STATE PERMIT CONTROLLED DRAWING
PARTS LIST
REVISIONS
CAMDS – ENGINEERING DIVISION TOOELE ARMY DEPOT TOOELE, UTAH 84074
MPF
AIR POLLUTION CONTROL
P & ID
F 54931 TCDS 05-150-01 J

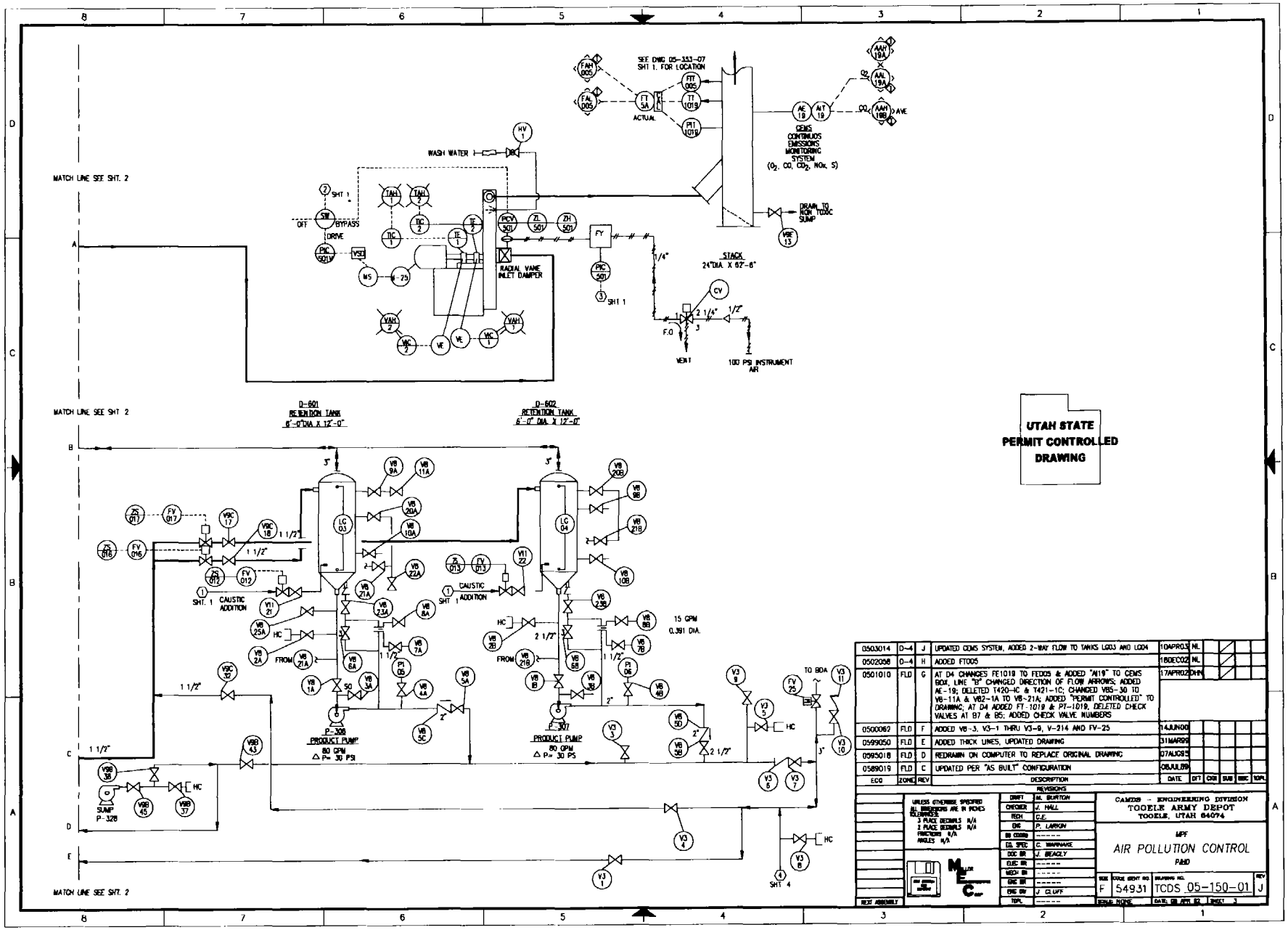
MATCH LINE SEE SHT. 2
SEE DWG 05-353-07 SHT 1. FOR LOCATION
ACTUAL
CEMS CONTINUOS EMISSIONS MONITORING SYSTEM (O_2, CO, CO_2, NOx, S)
WASH WATER
DRAIN TO RCRA TOXIC SUMP
OFF
BYPASS
DRIVE
RADIAL VANE INLET DAMPER
STACK 24"DIA X 62'-6"
VENT
100 PSI INSTRUMENT AIR
D-601 RETENTION TANK 6'-0"DIA X 12'-0"
D-602 RETENTION TANK 6'-0" DIA X 12'-0"
CAUSTIC ADDITION
15 GPM 0.391 DIA.
P-308 PRODUCT PUMP 80 GPM △P= 30 PSI
P-307 PRODUCT PUMP 80 GPM △P= 30 PS
SUMP P-328
TO BOA
UTAH STATE PERMIT CONTROLLED DRAWING
0503014 D-4 J UPDATED CEMS SYSTEM, ADDED 2-WAY FLOW TO TANKS LG03 AND LG04 10APR03 NL
0502058 D-4 H ADDED FT005 18DEC02 NL
0501010 FLD G AT D4 CHANGES FE1019 TO FE005 & ADDED "A19" TO CEMS BOX, LINE "B" CHANGED DIRECTION OF FLOW ARROWS; ADDED AE-19; DELETED 1420-4C & 1421-1C; CHANGED V85-30 TO V8-11A & V82-1A TO V8-21A; ADDED "PERMIT CONTROLLED" TO DRAWING; AT D4 ADDED FT-1019 & PT-1019, DELETED CHECK VALVES AT B7 & B5; ADDED CHECK VALVE NUMBERS 17APR02 DHN
0500062 FLD F ADDED V8-3, V3-1 THRU V3-9, V-214 AND FV-25 14JUN00
0599050 FLD E ADDED THICK LINES, UPDATED DRAWING 31MAR99
0595018 FLD D REDRAWN ON COMPUTER TO REPLACE ORIGINAL DRAWING 07AUG95
0589019 FLD C UPDATED PER "AS BUILT" CONFIGURATION 08JUL89
ECO ZONE REV DESCRIPTION DATE DFT CKR SUB ENG TOPL
REVISIONS
UNLESS OTHERWISE SPECIFIED ALL DIMENSIONS ARE IN INCHES TOLERANCES: 3 PLACE DECIMALS N/A 2 PLACE DECIMALS N/A FRACTIONS N/A ANGLES N/A
NEXT ASSEMBLY
DRAFT M. BURTON
CHECKER J. HALL
TECH G.E.
ENG P. LARKIN
DR COORD ------
CO. SPEC C. WARRANKE
DOC BR J. BEAGLY
CLEC BR ------
MECH BR ------
ENG BR ------
ENG BR J. CLIFF
TOPL ------
CAMDEN - ENGINEERING DIVISION
TOOELE ARMY DEPOT
TOOELE, UTAH 84074
MPF
AIR POLLUTION CONTROL
PAND
SIZE F CODE IDENT NO. 54931 DRAWING NO. TCDS 05-150-01 REV J
SCALE NONE DATE, DR APR 02 SHEET 3

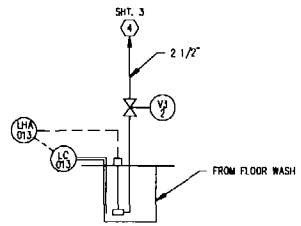

NON-TOXIC PUMP P_319
FLOOR WASH SUMP
PUMP
90 GPM ΔP.=18 P S I

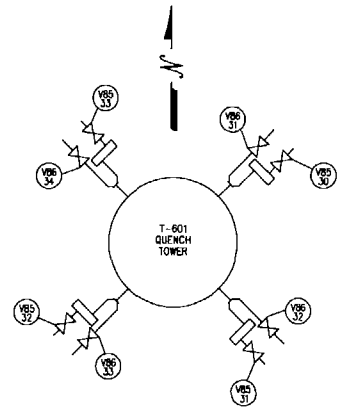

PLAN VIEW
PLAN OF DETAIL 1

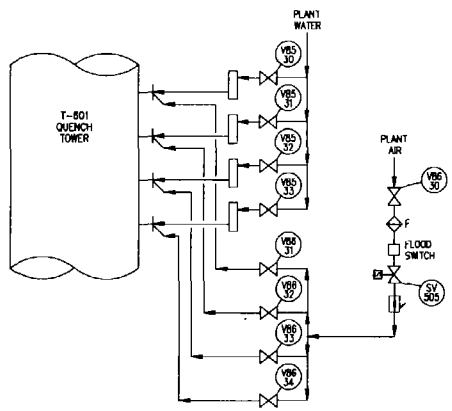

DETAIL 1

UTAH STATE PERMIT CONTROLLED DRAWING

PARTS LIST

FIND NO.	QTY	UNIT	NOMENCLATURE	CODE IDENT NO.	MANUFACTURE PART NO.	INVENTORY CONTROL OR PART NO

ECO	ZONE	REV	DESCRIPTION	DATE	DFT	CKR	SUB	BRC	TOPL
0502002	B5 B2	F	CHANGED "FV-505" TO "SV-505"; ADDED "PERMIT CONTROLLED" TO DRAWING.	04APR02	DHN				
0500083	FLD	E	CHANGED SV-505 TO FV-505 AND LD13-C TO LC-013.	14JUN00	BB				
0599051	FLD	D	ADDED SHEET 3 REF; UPDATED TO CURRENT STANDARDS	01APR99	BB				
0595019	FLD	C	REDRAWN TO ADD TO COMPUTER FORMA; REMOVE TOXIC SUMP P-319	18JUL95					
0589016	D-4	B	REPLACED VALVE V-89-2 WITH V16-M.	28JUN89					
0583180	FLD	A	REMOVE ANALYZER PIPING DETAILS	18OCT83					

REVISIONS

UNLESS OTHERWISE SPECIFIED ALL DIMENSIONS ARE IN INCHES
TOLERANCES:
3 PLACE DECIMALS N/A
2 PLACE DECIMALS N/A
FRACTIONS N/A
ANGLES N/A

DRAFT	M. BURTON
CHECKER	G. LAWRENCE
TECH	C.F.
ENG	P. LARKIN
EB COORD	------
EQ. SPEC	A. DOBSON
DOC BR	J. BEAGLEY
ELEC BR	------
MECH BR	------
CHG BR	------
ENG BR	J. CLUFF
TOPL	------

NEXT ASSEMBLY

MILLER ENGINEERING CORP.

CAMDS - ENGINEERING DIVISION
TOOELE ARMY DEPOT
TOOELE, UTAH 84074

MPF
AIR POLLUTION CONTROL
P & I D

SIZE	CODE IDENT NO.	DRAWING NO.	REV
F	54931	TCDS 05-150-01	F

SCALE NONE | DATE 13 APR 82 | SHEET 1 OF

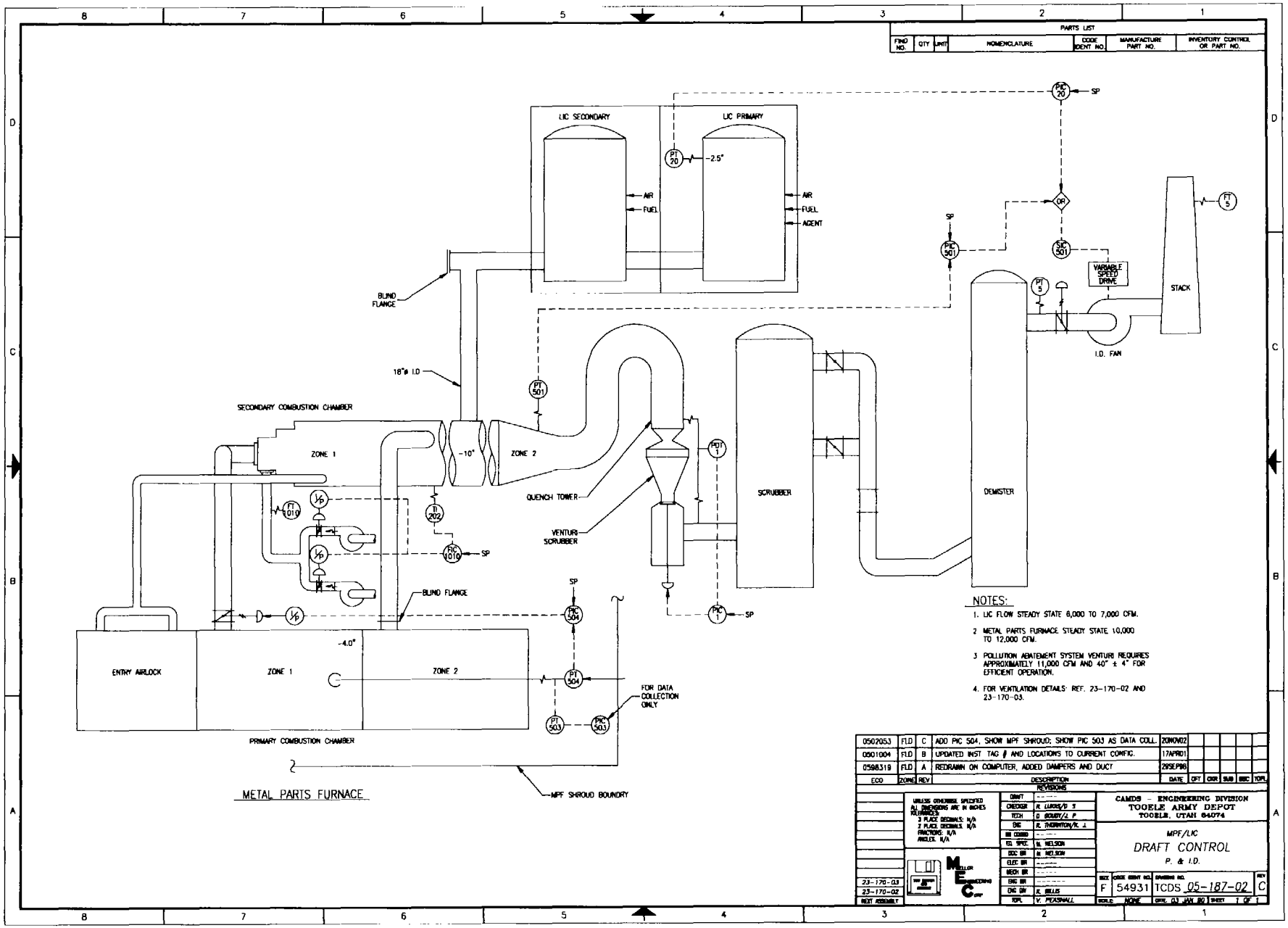
PARTS LIST
FIND NO. | QTY | UNIT | NOMENCLATURE | CODE IDENT NO. | MANUFACTURE PART NO. | INVENTORY CONTROL OR PART NO.
LIC SECONDARY
LIC PRIMARY
AIR
FUEL
AGENT
-2.5"
SP
BLIND FLANGE
18"ø I.D
SECONDARY COMBUSTION CHAMBER
ZONE 1
-10"
ZONE 2
QUENCH TOWER
VENTURI SCRUBBER
SCRUBBER
DEMISTER
VARIABLE SPEED DRIVE
STACK
I.D. FAN
ENTRY AIRLOCK
-4.0"
FOR DATA COLLECTION ONLY
PRIMARY COMBUSTION CHAMBER
MPF SHROUD BOUNDRY
METAL PARTS FURNACE
NOTES:
1. LIC FLOW STEADY STATE 6,000 TO 7,000 CFM.
2 METAL PARTS FURNACE STEADY STATE 10,000 TO 12,000 CFM.
3 POLLUTION ABATEMENT SYSTEM VENTURI REQUIRES APPROXIMATELY 11,000 CFM AND 40" ± 4" FOR EFFICIENT OPERATION.
4. FOR VENTILATION DETAILS: REF. 23-170-02 AND 23-170-03.
0502053 | FLD | C | ADD PIC 504, SHOW MPF SHROUD; SHOW PIC 503 AS DATA COLL. | 20MAR02
0501004 | FLD | B | UPDATED INST TAG # AND LOCATIONS TO CURRENT CONFIG. | 17APR01
0598319 | FLD | A | REDRAWN ON COMPUTER, ADDED DAMPERS AND DUCT | 29SEP98
ECO | ZONE | REV | DESCRIPTION | DATE | DFT | CKR | SUB | ENG | TOPL
REVISIONS
CAMDS - ENGINEERING DIVISION
TOOELE ARMY DEPOT
TOOELE, UTAH 84074
MPF/LIC
DRAFT CONTROL
P. & I.D.
F | 54931 | TCDS 05-187-02 | C
SCALE NONE
23-170-03
23-170-02
NEXT ASSEMBLY

PARTS LIST						
FIND NO.	QTY	UNIT	NOMENCLATURE	CODE IDENT NO.	MANUFACTURE PART NO	INVENTORY CONTROL OR PART NO

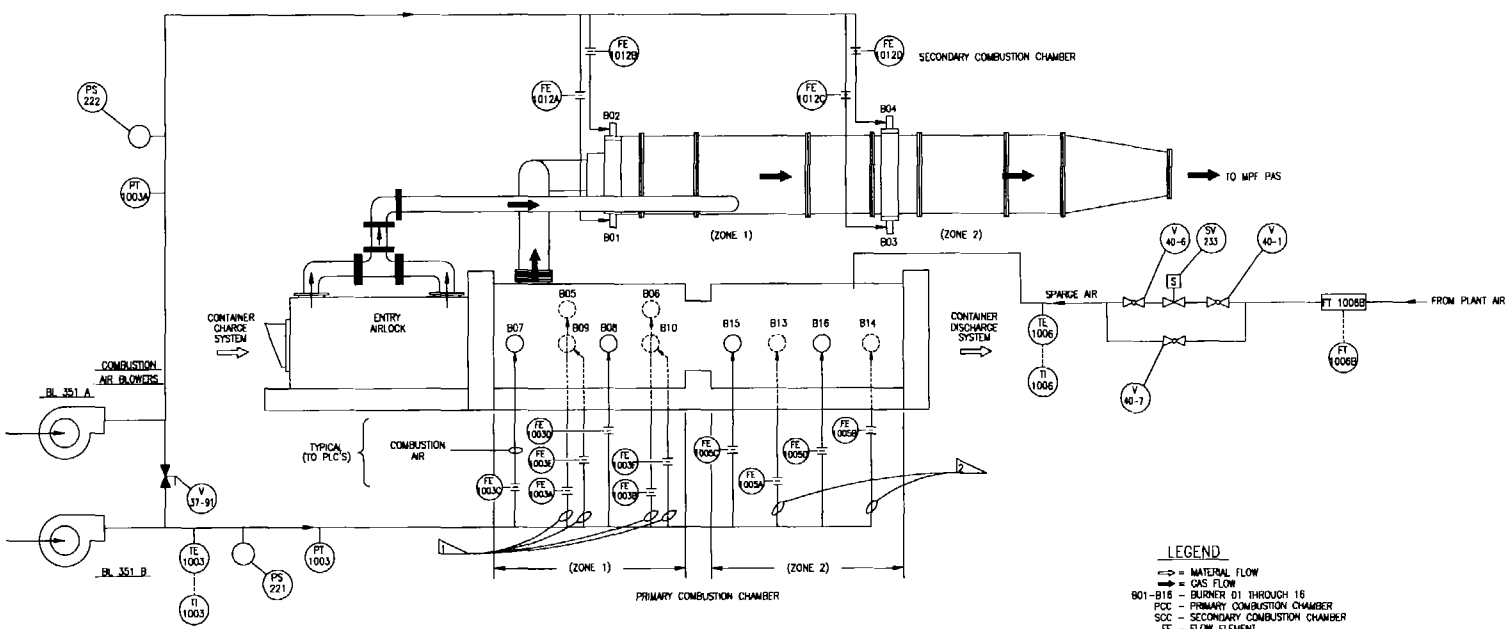

WEST ELEVATION
SYSTEM CONFIGURATION

LEGEND

⇔ = MATERIAL FLOW
➡ = GAS FLOW
B01-B16 – BURNER 01 THROUGH 16
PCC – PRIMARY COMBUSTION CHAMBER
SCC – SECONDARY COMBUSTION CHAMBER
FE – FLOW ELEMENT

NOTES:

1. BURNERS B05, B06, B09 & B010 EAST SIDE OF PRIMARY COMBUSTION CHAMBER ZONE 1.
2. BURNER'S B013 & B014 @ EAST SIDE OF PRIMARY COMBUSTION CHAMBER ZONE 2.

ECO	ZONE	REV	DESCRIPTION	DATE	DFT	DWR	SUB	BBC	TOPL
0503018	C-2	C	CHANGED VALVES 40-2 & 40-3 TO 40-6 & 40-7	13MAY03	NL				
0503016	FLD	B	ADDED SPARGE AIR	12MAY03					
0502055	FLD	A	ADDED TE & TI 1003, CHANGED ENTRY AIRLOCK CONNECTION TO SECONDARY COMBUSTION CHAMBER. CHANGED PUNCH CHAMBER TO ENTRY AIRLOCK. ADDED VALVE V37-91	18DEC02	NL				

REVISIONS

UNLESS OTHERWISE SPECIFIED ALL DIMENSIONS ARE IN INCHES TOLERANCES: 3 PLACE DECIMALS: N/A; 2 PLACE DECIMALS: N/A; FRACTIONS: N/A; ANGLES: N/A

NEXT ASSEMBLY

DRAWN	------
CHECKER	C. LAWRENCE
TECH	J. ROBERTS
ENG	------
QA COORD	K. FRAUGHTON
EQ SPEC	------
DOC BR	J. HENSON
ELEC BR	R. RYBIO
MECH BR	R. THORNTON
CHE BR	------
CHE BV	D.R. GREEDER
TOPL	V. PEASNALL

CAMDS – ENGINEERING DIVISION
TOOELE ARMY DEPOT
TOOELE, UTAH 84074

M P F
COMBUSTION AIR
P & ID

SIZE	CODE IDENT NO	DRAWING NO	REV
F	54931	TCDS 05-122-01	C

SCALE NONE | DATE 25 JAN 99 | SHEET 1 OF 1

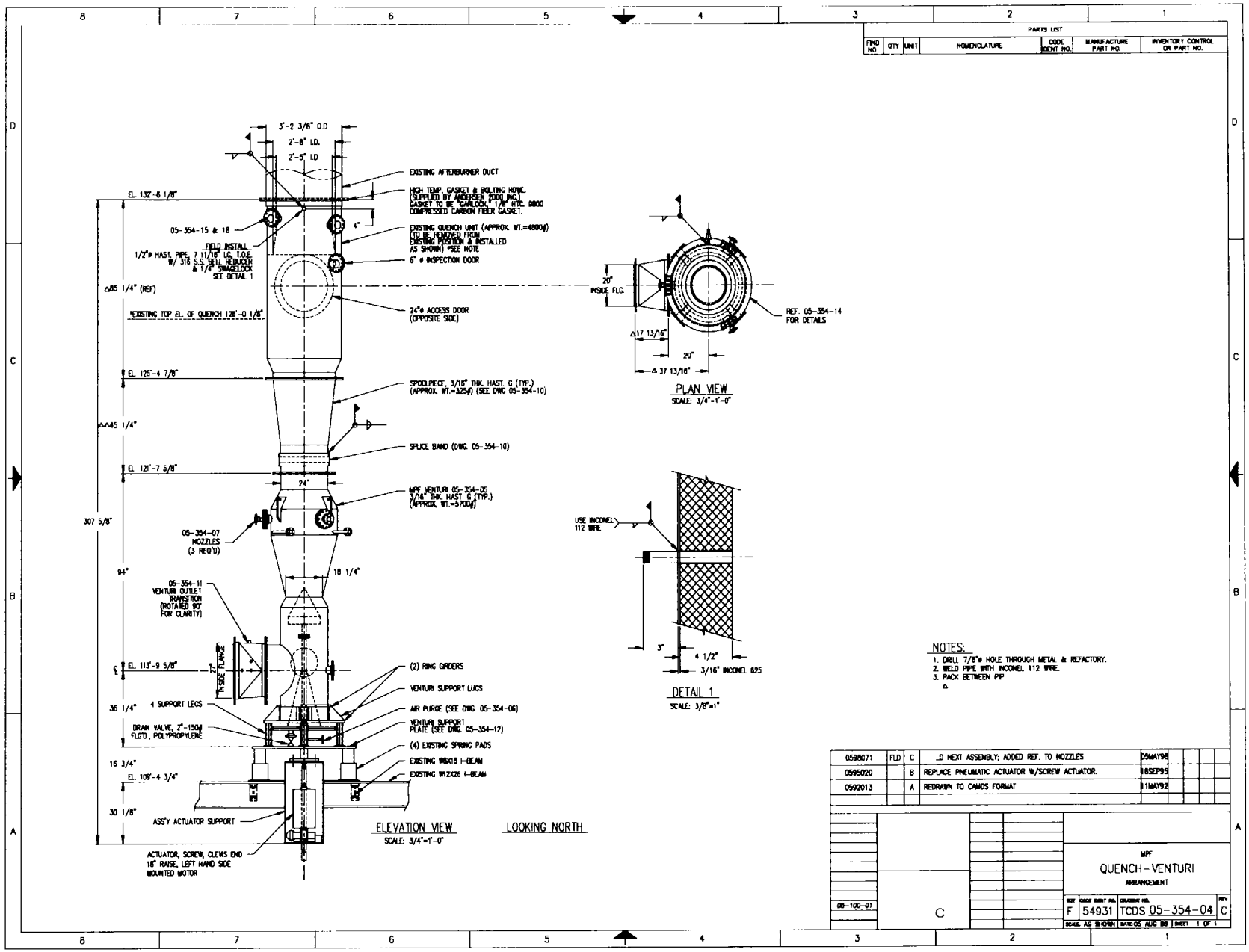
PARTS LIST
FIND NO | QTY | UNIT | NOMENCLATURE | CODE IDENT NO. | MANUFACTURE PART NO. | INVENTORY CONTROL OR PART NO.
3'-2 3/8" O.D
2'-8" I.D.
2'-5" I.D
EXISTING AFTERBURNER DUCT
HIGH TEMP. GASKET & BOLTING HDWE. (SUPPLIED BY AMOOSEN 2000, INC.) GASKET TO BE "GARLOCK" 1/4" HTC. 9800 COMPRESSED CARBON FIBER GASKET.
EL. 132'-6 1/8"
05-354-15 & 16
4"
EXISTING QUENCH UNIT (APPROX. WT.=4800#) TO BE REMOVED FROM EXISTING POSITION & INSTALLED AS SHOWN) *SEE NOTE
FIELD INSTALL
1/2"ø HAST. PIPE, 7 11/16" LG. T.O.E. W/ 316 S.S. BELL REDUCER & 1/4" SWAGELOCK SEE DETAIL 1
6" ø INSPECTION DOOR
Δ85 1/4" (REF)
*EXISTING TOP EL. OF QUENCH 128'-0 1/8"
24"ø ACCESS DOOR (OPPOSITE SIDE)
EL. 125'-4 7/8"
SPOOLPIECE, 3/16" THK. HAST. G (TYP.) (APPROX. WT.=325#) (SEE DWG 05-354-10)
ΔΔ45 1/4"
SPLICE BAND (DWG. 05-354-10)
EL. 121'-7 5/8"
24"
MPF VENTURI 05-354-05 3/16" THK. HAST. G (TYP.) (APPROX. WT.=5700#)
307 5/8"
05-354-07 NOZZLES (3 REQ'D)
94"
18 1/4"
05-354-11 VENTURI OUTLET TRANSITION (ROTATED 90° FOR CLARITY)
INSIDE FLANGE
EL. 113'-9 5/8"
(2) RING GIRDERS
VENTURI SUPPORT LUGS
36 1/4"
4 SUPPORT LEGS
AIR PURGE (SEE DWG. 05-354-06)
DRAIN VALVE, 2"-150# FLGTD, POLYPROPYLENE
VENTURI SUPPORT PLATE (SEE DWG. 05-354-12)
(4) EXISTING SPRING PADS
16 3/4"
EXISTING W8X18 I-BEAM
EL. 109'-4 3/4"
EXISTING W12X26 I-BEAM
30 1/8"
ASS'Y ACTUATOR SUPPORT
ACTUATOR, SCREW, CLEVIS END 18" RAISE, LEFT HAND SIDE MOUNTED MOTOR
ELEVATION VIEW
SCALE: 3/4"=1'-0"
LOOKING NORTH
20" INSIDE FLG.
Δ17 13/16"
20"
Δ 37 13/16"
REF. 05-354-14 FOR DETAILS
PLAN VIEW
SCALE: 3/4"=1'-0"
USE INCONEL 112 WIRE
3"
4 1/2"
3/16" INCONEL 625
DETAIL 1
SCALE: 3/8"=1"
NOTES:
1. DRILL 7/8"ø HOLE THROUGH METAL & REFACTORY.
2. WELD PIPE WITH INCONEL 112 WIRE.
3. PACK BETWEEN PIP
Δ
0598071 | FLD | C | ..D NEXT ASSEMBLY; ADDED REF. TO NOZZLES | 05MAY98
0595020 | B | REPLACE PNEUMATIC ACTUATOR W/SCREW ACTUATOR. | 18SEP95
0592013 | A | REDRAWN TO CAMOS FORMAT | 11MAY92
MPF
QUENCH-VENTURI
ARRANGEMENT
05-100-07
C
SIZE F | CODE IDENT NO. 54931 | DRAWING NO. TCDS 05-354-04 | REV C
SCALE AS SHOWN | DATE 05 AUG 88 | SHEET 1 OF 1